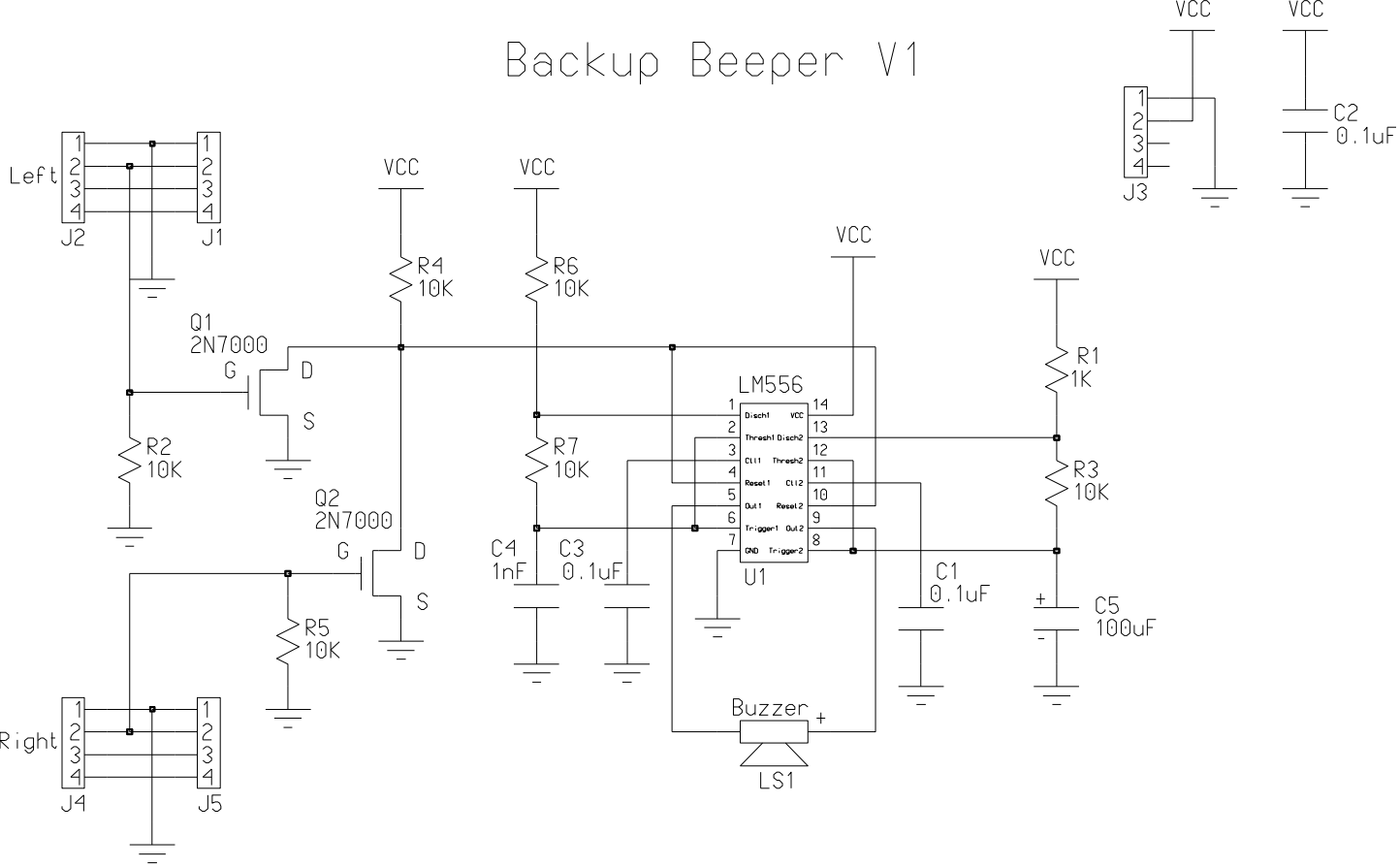Backup Beeper V1